Thermostatic regulating unit for underfloor radiant panels

INFLOOR HEATING SYSTEMS

cert. n° 0003
ISO 9001

Function

The thermostatic regulating unit is designed for maintaining the temperature set for the flow fluid constant in a low temperature circuit for underfloor radiant panels.

This unit has been specially designed for use with both the external and wall embedded versions of the separator/distribution manifolds.

It comes supplied with a three-way thermostatic mixing valve with built-in temperature sensor, a three-speed pump, a safety thermostat, a differential by-pass valve, flow and return temperature gauges and secondary circuit shut-off valves.

Supplied complete with preformed insulation shell.

Product range

Part # 31093	External thermostatic regulating unit for radiant panels for Sepcoll. Flow upwards, flow on right hand side	Size 1 ″
Part # 31094	External thermostatic regulating unit for radiant panels for Sepcoll. Flow upwards, flow on left hand side	Size 1″

Technical specification

Three-way thermostatic valve

Materials: - Body:	brass EN 1982 CB753S
- Internal cartridge	brass EN 12164 CW614N, chemically nickel plated
- Springs:	stainless steel
- Seals:	EPDM

By-pass

Materials: - Body:	brass EN 1982 CB753S
- Springs:	stainless steel
- Obturator:	EPDM
- Seals:	EPDM

Shut-off valves

Materials: - Body:	brass EN 12165 CW617N
- Seals:	EPDM

Performance

Medium:	water, glycol solutions
Max. percentage of glycol:	30%
Setting temperature range:	25 – 55°C
Accuracy:	± 2°C
Primary inlet max. temperature:	85°C
By-pass setting range:	10-60 kPa (1- 6 m w.g.)
Connections: - primary circuit:	1″ F with union
- secondary circuit:	1″ F
- connection centre distance:	90 mm

Safety thermostat

Set temperature:	55°C
Protection class:	IP 55
Contacts rating:	10 A/ 240 V

Wiring diagrams

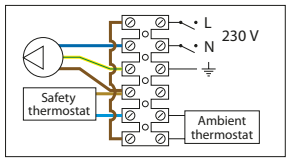

Pump

Three-speed pump:	UPS 25/60
Material: - Body:	GG 15/20 cast iron
Electric supply:	230 V - 50 Hz
Max. relative humidity:	95%
Max. ambient temperature:	80°C
Protection class:	IP 44
Pump centre distance:	130 mm
Pump connections:	1 1/2″ with union

Head available at the regulating unit connections

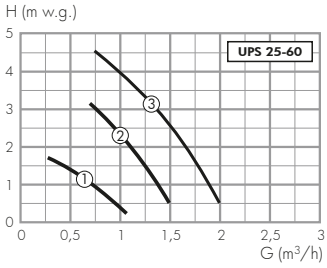

Power consumption

Speed	I (A)	P (W)	n (r.p.m.)
3	0,40	90	1800
2	0,30	65	1100
1	0,20	45	700

Insulation technical specification

Material:	closed cell expanded PEX
Thickness:	20 mm
Density: - inner part	30 Kg/m³
- outer part	50 Kg/m³
Thermal conductivity (DIN 52612): - at 0°C	0,038 W/(m·K)
- at 40°C	0,045 W/(m·K)
Coefficient of resistance to the diffusion of vapour (DIN 52615):	> 1.300
Temperature range:	0 – 100°C
Fire resistance (DIN 4102):	B2 class

Dimensions

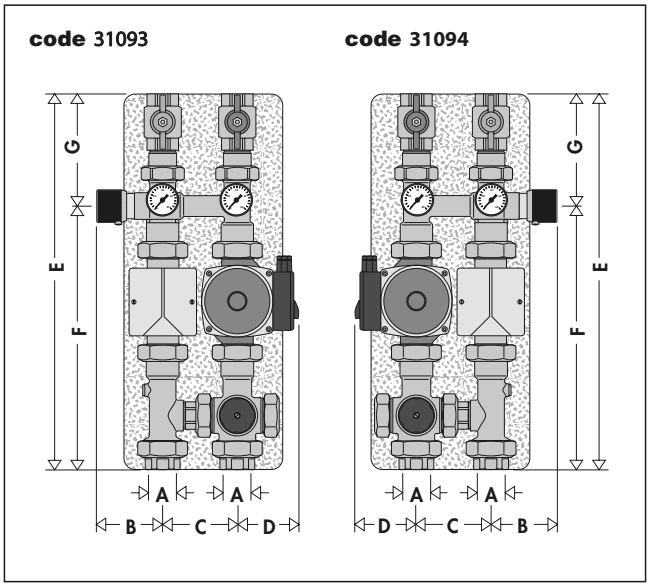

Code	A	B	C	D	E	F	G
163600	1″	95	90	77	460	320	140
163610	1″	95	90	77	460	320	140

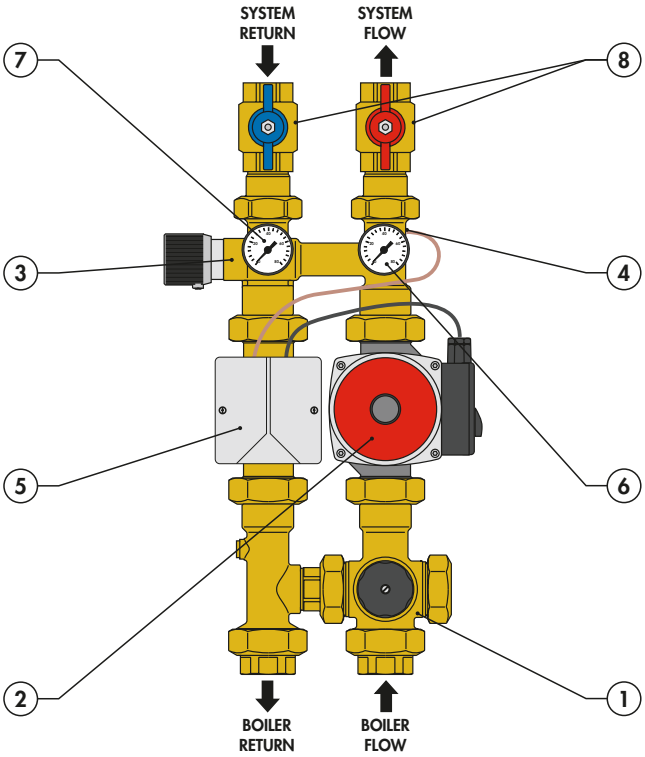

Characteristic components

1 Three-way thermostatic valve with built-in temperature sensor
2 Three-speed UPS 25-60 pump
3 Differential by-pass valve
4 Safety thermostat
5 Wiring box
6 Flow temperature gauge
7 Return temperature gauge
8 Secondary circuit shut-off valves

Hydraulic diagram

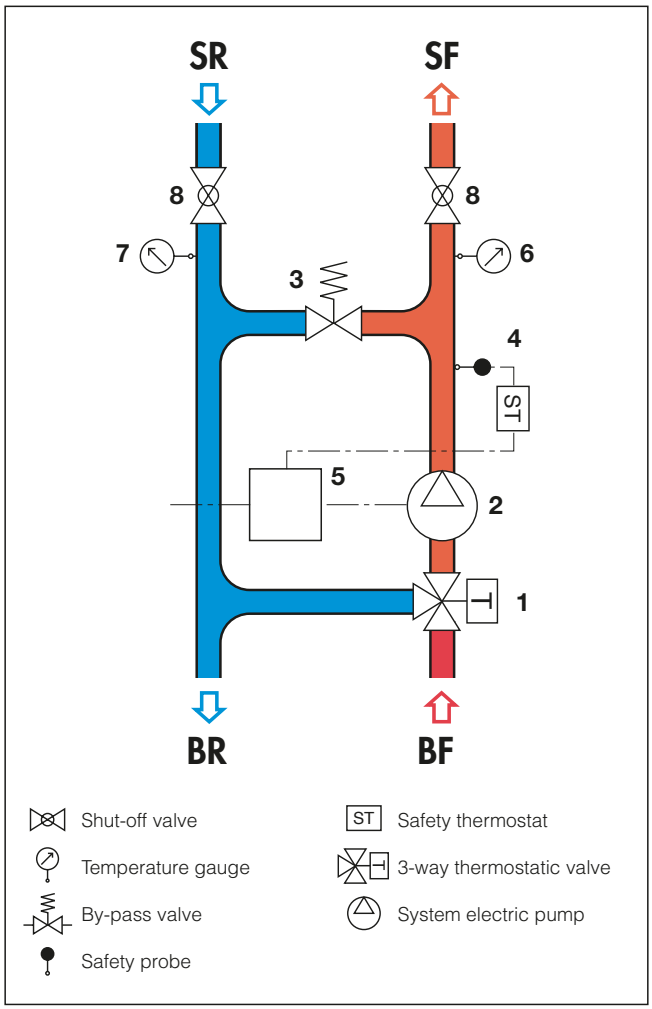

Operating principle

The regulating element of the three-way thermostatic valve is a temperature sensor, which is completely immersed in the outlet chamber of mixed water. It continuously regulates the correct proportions of hot water from the boiler and of return water from the panel circuit by expanding or contracting.
It regulates these flows by means of a shutter which slides in a special cylinder located between the hot water and the water returning from the panel circuit passage seats.
Even if the thermal load of the secondary circuit or the temperature of the water coming from the boiler changes, the mixing valve will automatically regulate the flow of water to provide water at the temperature that has been set.

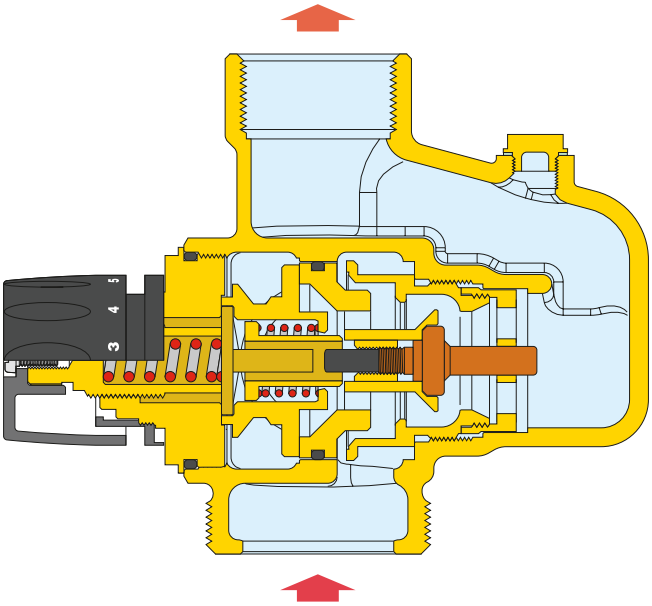

Construction details

Reduced pressure loss

The three way mixing valve is fitted with a special shutter which operates in special seatings where the water passes.
It therefore guarantees high flow rates with reduced obstruction, while maintaining accurate temperature regulation.

Replaceable cartridge

The internal cartridge which contains all the regulation components is pre-assembled in a single unit and can be easily inspected for cleaning or replacement if required without the need to remove the valve body from the piping.

Anti-stick surfaces

All the functional parts, such as the shutter, the seatings and guides have chemically nickel plated surfaces. This surface treatment reduces the wear of moving parts to a minimum and guarantees high performance and long life.

Low heat inertia thermostat sensor

The element that is sensitive to temperature change, the “engine” of the three-way thermostatic valve, has low thermal inertia; it therefore reacts quickly to changes in the temperature and pressure of the inlet water which allows the valve to respond rapidly.

Temperature regulation and lock device

The temperature can be set between minimum and maximum with one turn of the control knob (360°). There is also a tamper-proof device for locking the temperature set.

Installation

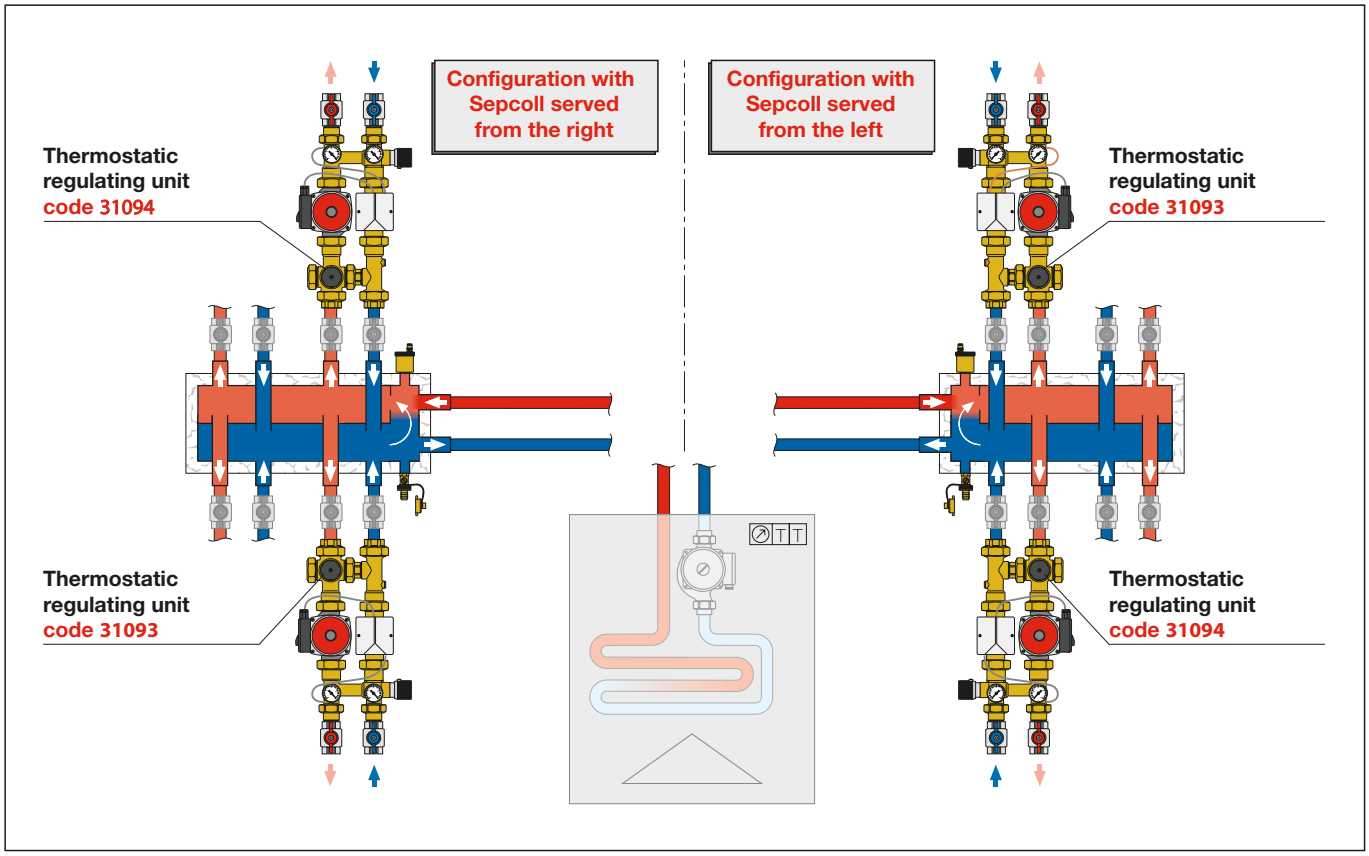

Temperature setting

The temperature is set to the desired temperature by using the graduated adjustment knob fitted on the three-way thermostatic valve.

Position	Min	1	2	3	4	5	6	7	Max
Temp. (°C)	20	25	30	35	40	45	50	55	58

Reference: T_{boiler} = 70°C

Locking the setting

Set the knob on the desired number, remove the screw on the top, pull the knob off and push it back on so that the groove on the inside fits over the ridge on the knob holder.

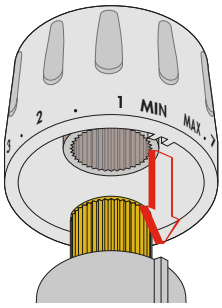

Differential by-pass

The differential by-pass valve is used to control the head in the secondary circuit. When the differential pressure set for the valve is reached, the valve opens and allows fluid to pass between the flow and return of the circuit, limiting the differential pressure at the value set.
If the individual circuits to panels are shut-off by automatic two way on/off or modulating valves, the valve prevents excessive fluid velocities and the pump from overheating.

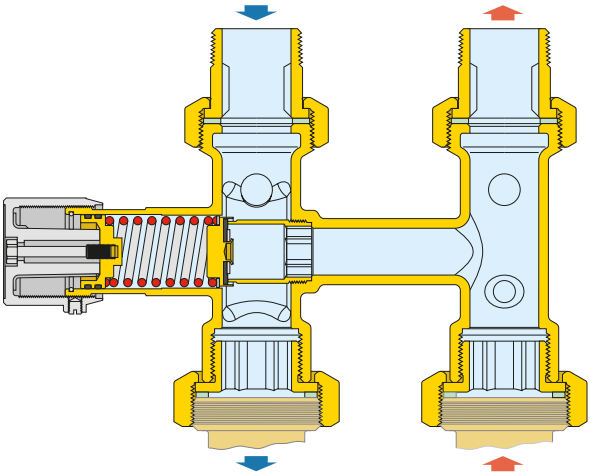

By-pass flow curves

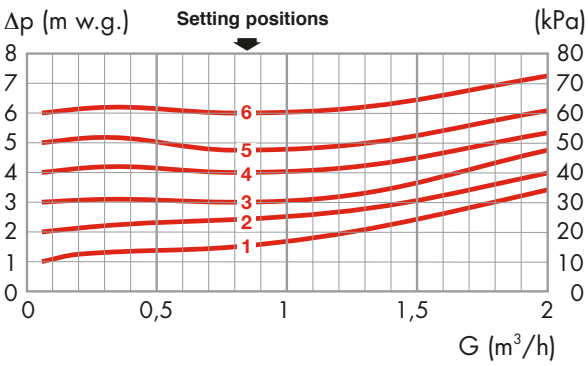

Cartridge replacement

The internal cartridge containing all the regulation components can be inspected and replaced if necessary without the need to remove the valve from the piping.

1) Close the hot and cold inlet shut-off valves

2) Remove the internal cartridge for inspection or replacement by turning the nut as shown.

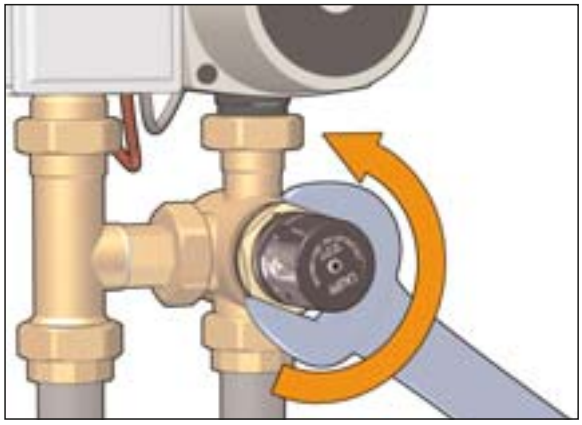

3) Replacement cartridges come complete with adjustment knobs.

4) Open the shut-off valves again and set the mixing valve at the temperature desired.

Application diagrams

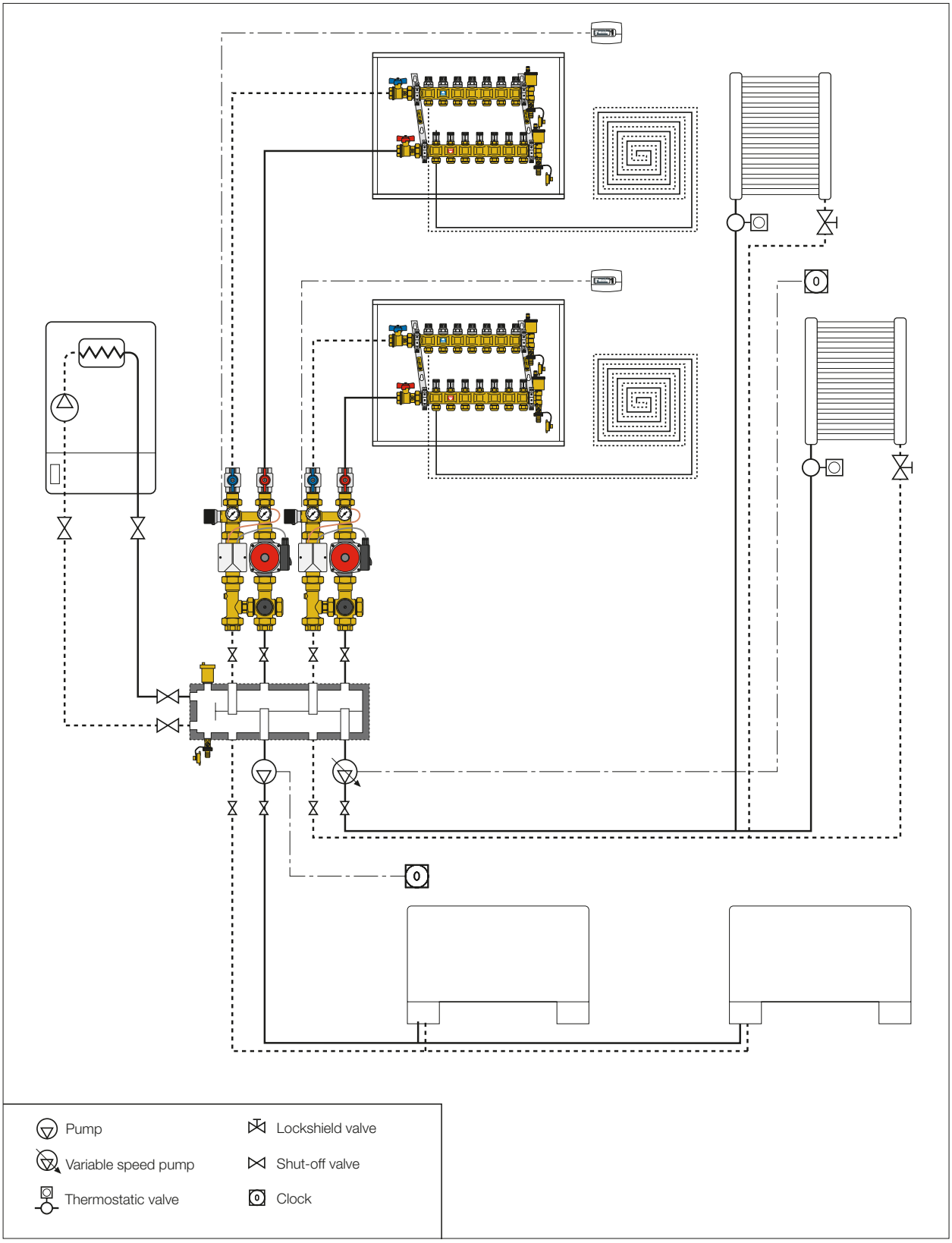

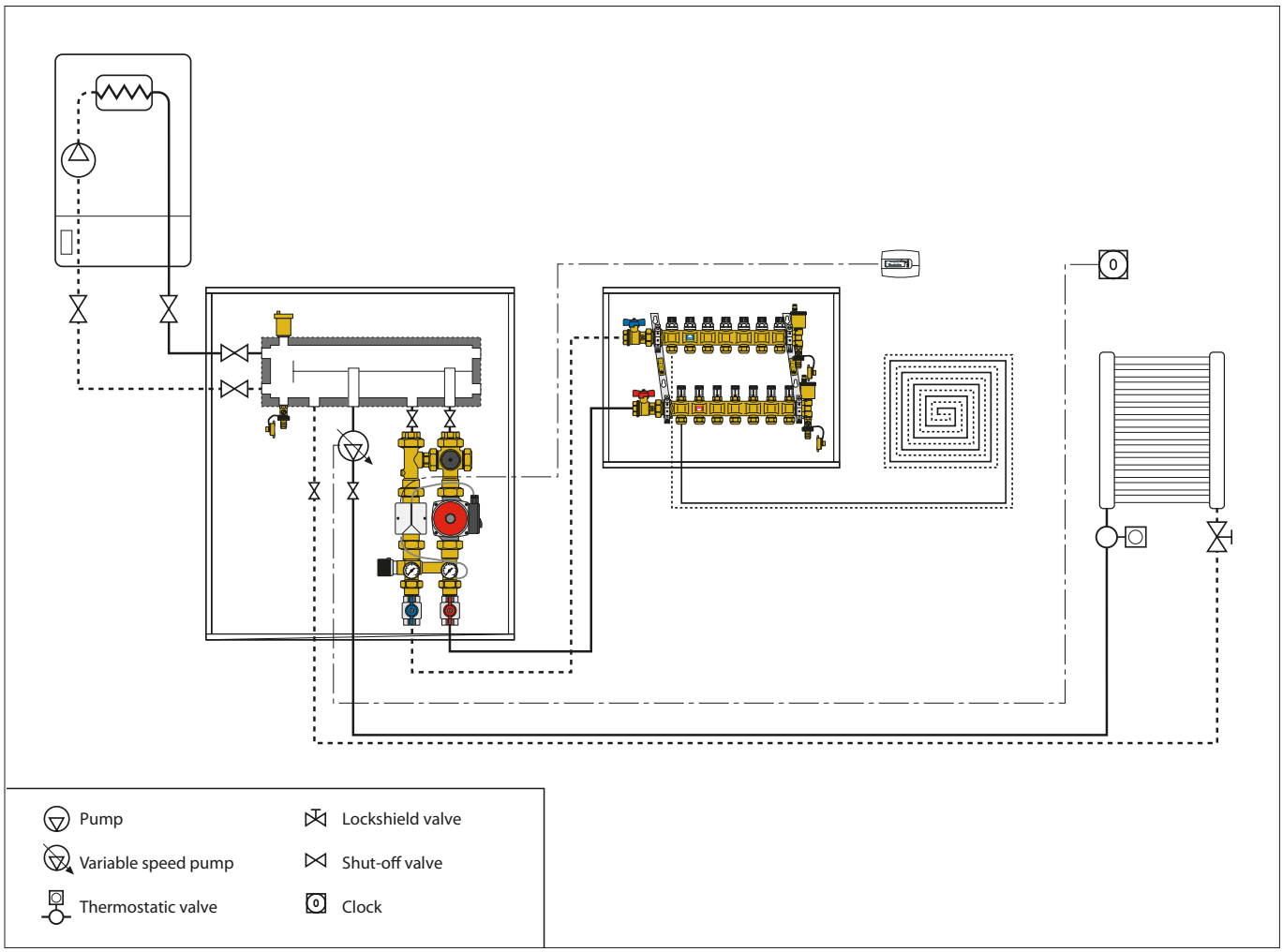

SPECIFICATION SUMMARIES

Thermostatic regulating unit for underfloor radiant panels for the Sepcoll 559 series. Configuration with flow upwards and flow on the right hand side (or flow on left hand side). Connections to the primary circuit 1"F union. Connections to the secondary circuit 1" F. Cente r distance of connections to the primary and secondary circuits 90 mm. Setting temperature range: 25 – 55°C. Accuracy: ±2°C. Primary inlet maximum temperature: 85°C. Maximum working pressure: 10 bar. Complete with: three-way thermostatic valve with built-in sensor. Body and internal cartridge in brass with chemically nickel plated sliding surfaces. Springs in stainless steel. EPDM seals. Safety thermostat set at 55°C, protection class: IP 55. Three-speed pump: UPS 25-60, power supply: 230 V-50 Hz, Maximum ambient temperature: 80°C, protection class: IP 44. Temperature gauge scales: 0°C to 80°C. Differential by-pass valve, brass body, stainless steel spring, pressure range: 10 to 60 kPa. Shut-off valves on secondary circuit. Insulation in preformed closed cell expanded PEX.

INFLOOR SALES & SERVICE · PO BOX 4945 · BUENA VISTA, CO · 81211 · TEL. 800-608-0562 · FAX 719-395-3555
· Http://www. infloor.com · E-mail: info@infloor.com ·