Pre-assembled distribution manifolds for radiant panel systems

INFLOOR HEATING SYSTEMS

cert. n° 0003
ISO 9001

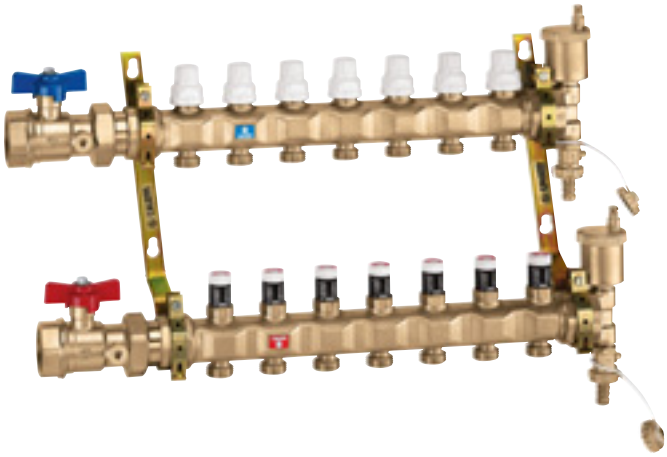

Function

Distribution manifolds for radiant panel systems are used to optimally distribute the heating fluid in floor heating system circuits and ultimately improve the control of heat emission from the panels. The manifolds ensure that the flow to each circuit is regulated precisely and also control the shut-off, venting and automatic removal of air from the system.
Special solutions devised during sizing have also enabled depth to be reduced and connection between manifold and branches facilitated.

Reference Documents

Product guides for additional components, such as thermal actuators, flow meters, pressure differential bypass valves and darcel fittings.

Product range

Pre-assembled distribution manifold for radiant panel systems	Sizes 1" and 1 1/4"

Technical specification

Materials:

Flow manifold

- body:	brass EN 1982 CB753S
Micrometric balancing valve	
- body:	PA
- control device upper part:	brass EN 12164 CW614N
- obturator:	POM
- obturator seal:	EPDM
- knob:	ABS

Return manifold

- body:	brass EN 1982 CB753S
Shut-off valve	
- control device upper part:	brass EN 12164 CW614N and PA
- obturator stem:	stainless steel
- obturator:	EPDM
- springs:	stainless steel
- seals:	EPDM
- knob:	ABS

Ball valve

- body:	brass EN 12165 CW617N
- ball:	brass EN 12164 CW614N, chrome plated
- handle:	aluminium EN AB 46100

End fitting

- body:	brass EN 12165 CW617N
Automatic air vent valve	
- obturator stem:	brass EN 12164 CW614N
- spring:	stainless steel
- seals:	EPDM
- float:	PP

Performance:

Medium:	water, glycol solutions
Max. percentage of glycol:	30%
Max. working pressure:	10 bar
Max. end fitting discharge pressure:	2,5 bar
Working temperature range:	0–80°C
Nr. adjustment curves:	10
Micrometric regulating valve scale:	0–10
Accuracy:	± 5%
Main connections:	1", 1 1/4" F
Connection centre distance:	195 mm
Outlets:	3/4"M - Ø 18
Outlet centre distance:	50 mm

Dimensions

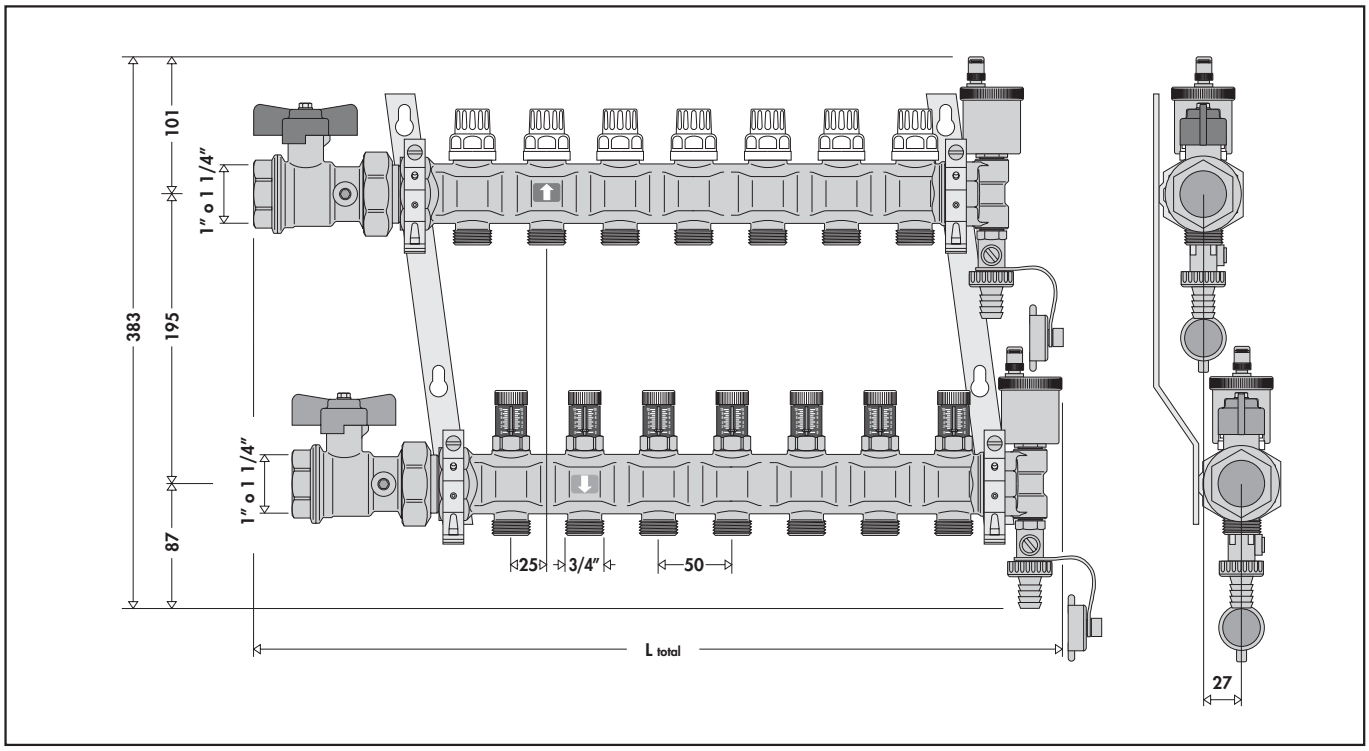

# of Outlets	3	4	5	6	7	8	9	10	11	12	13
Part # - 1" Inlet	22010	22011	22012	22013	22014	22015	22016	22017	22018	22019	22020
Part # - 1-1/4" Inlet	22030	22031	22032	22033	22034	22035	22036	22037	22038	22039	22040
Total length	15.2"	17.2"	19.1"	21.1"	23.1"	25.0"	28.2"	30.2"	32.1"	34.1"	36.0"
Weight (lbs.)	16	18	19	21	23	24	26	28	29	31	33

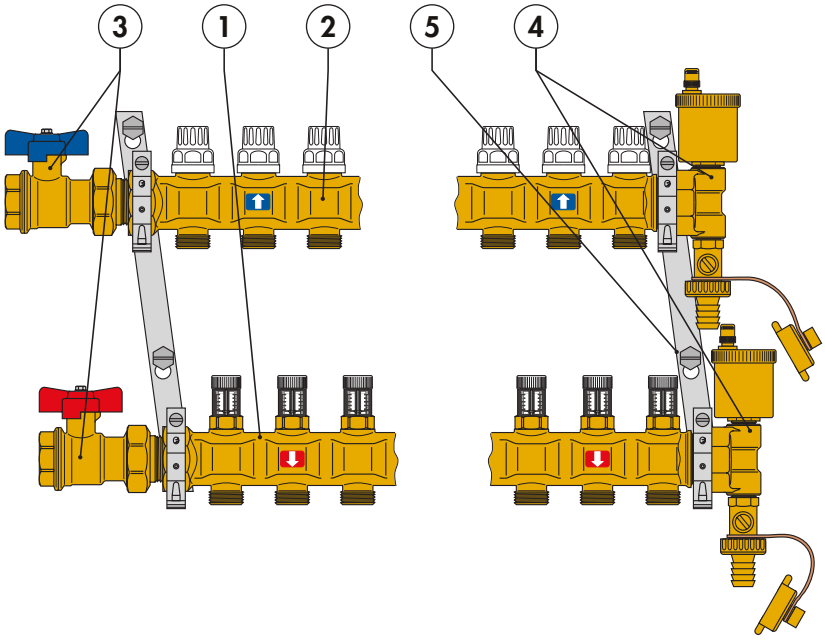

Characteristic components

1 Flow manifold complete with micrometric pre regulating valves with flow curve number indicator.

2 Return manifold complete with shut-off valves that can be used with thermoelectric actuators.

3 Pair of shut-off ball valves

4 End fittings consisting of a 3-way end fitting, automatic air vent valve and drain cock.

5 Pair of mounting brackets for use with series ~~659~~ boxes or direct wall installation.

Construction details

Flow manifold

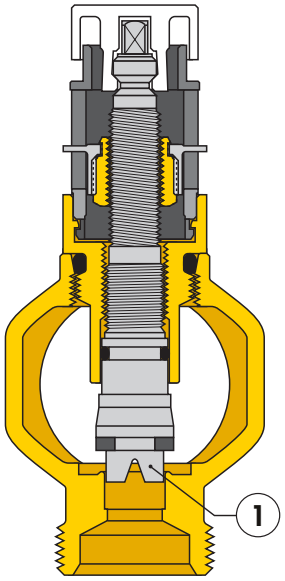

The micrometric regulating valve obturator is made of plastic (POM) and features an upside down V channel (1) to provide greater precision when regulating the flow delivered to the floor system circuits.

This solution offers the following advantages with respect to the traditional conically shaped obturator:

- greater precision, particularly for the low flow rates usually encountered in this kind of system.
- proportional flow rates due to the ability to mould the fluid passage profiles.
- absolute dimensional consistency during manufacture due to the die-cast obturator.

Return manifold

The return manifold is equipped with manual shut-off valves (1) which are used to shut off the flow to individual circuits.
They can also be used with a thermoelectric actuator which, when used with an ambient thermostat, maintains the ambient temperature at the set limits when thermal load varies.
The obturator stem (2) is made of polished stainless steel to minimise friction and prevent harmful encrustation from forming.
The control device upper part features a double EPDM O-ring seal (3) – (4) on the sliding stem.
The obturator (5) is made of EPDM and is moulded to optimise the hydraulic characteristics of the valve and reduce noise to a minimum as the fluid passes through and as it gradually opens and closes when operating with a thermo-electric actuator.

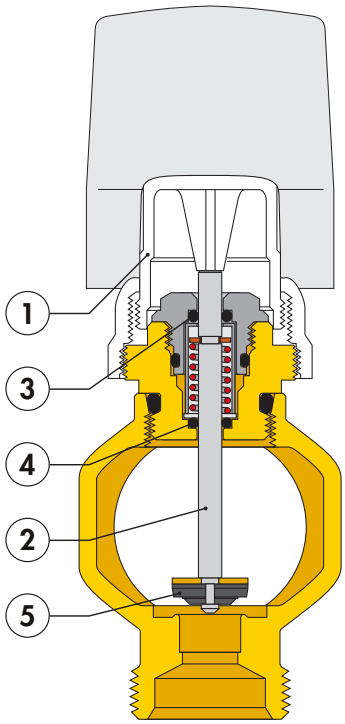

Exterior shape of the manifolds and mounting brackets

The exterior of the manifold deserves special mention because it can be cast in any shape to meet any requirements.
In the example shown below, indentations have been created in the manifold to correspond to the plastic pipes exiting from the upper manifold, thus partially accommodating the pipes and reducing their overall thickness. This does not interfere with the pressure loss values because the sections with the indentations (a) are equal to the sections in which the pipes are branched (b) and (c) and where the regulating parts (micrometric regulating and shut-off valve obturators) obstruct the passage of the fluid.

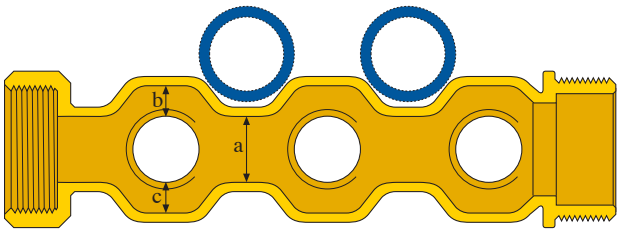

The partial accommodation of the pipes in the indentations created in the manifold is further enhanced by the shape of the mounting brackets, which are slanted to create a 3/4 in. offset between the upper and lower manifolds.

As shown in the figure below, this offset positions the pipes so that they perfectly match the profile of the manifold during installation.

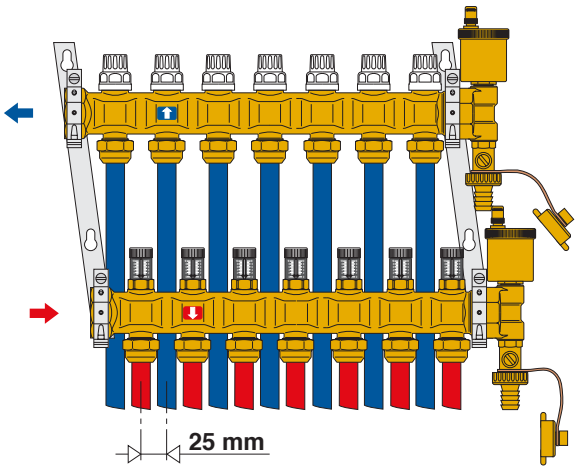

End fitting and automatic air vent valve

The end fitting consists of a fill/drain cock (1) and an automatic air vent valve with a hygroscopic safety cap (2). It has been specifically designed to close the air vent valve automatically if there is water near the vent itself.

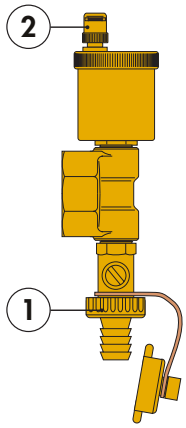

Hydraulic characteristics

To determine the hydraulic characteristics of the circuit, we must calculate the total pressure loss experienced by the flow of fluid as it passes through the manifold unit parts and the radiant panel circuits.

From a hydraulic standpoint, the manifold unit and circuits can be shown as an assembly of hydraulic elements that are arranged in series and parallel to each other.

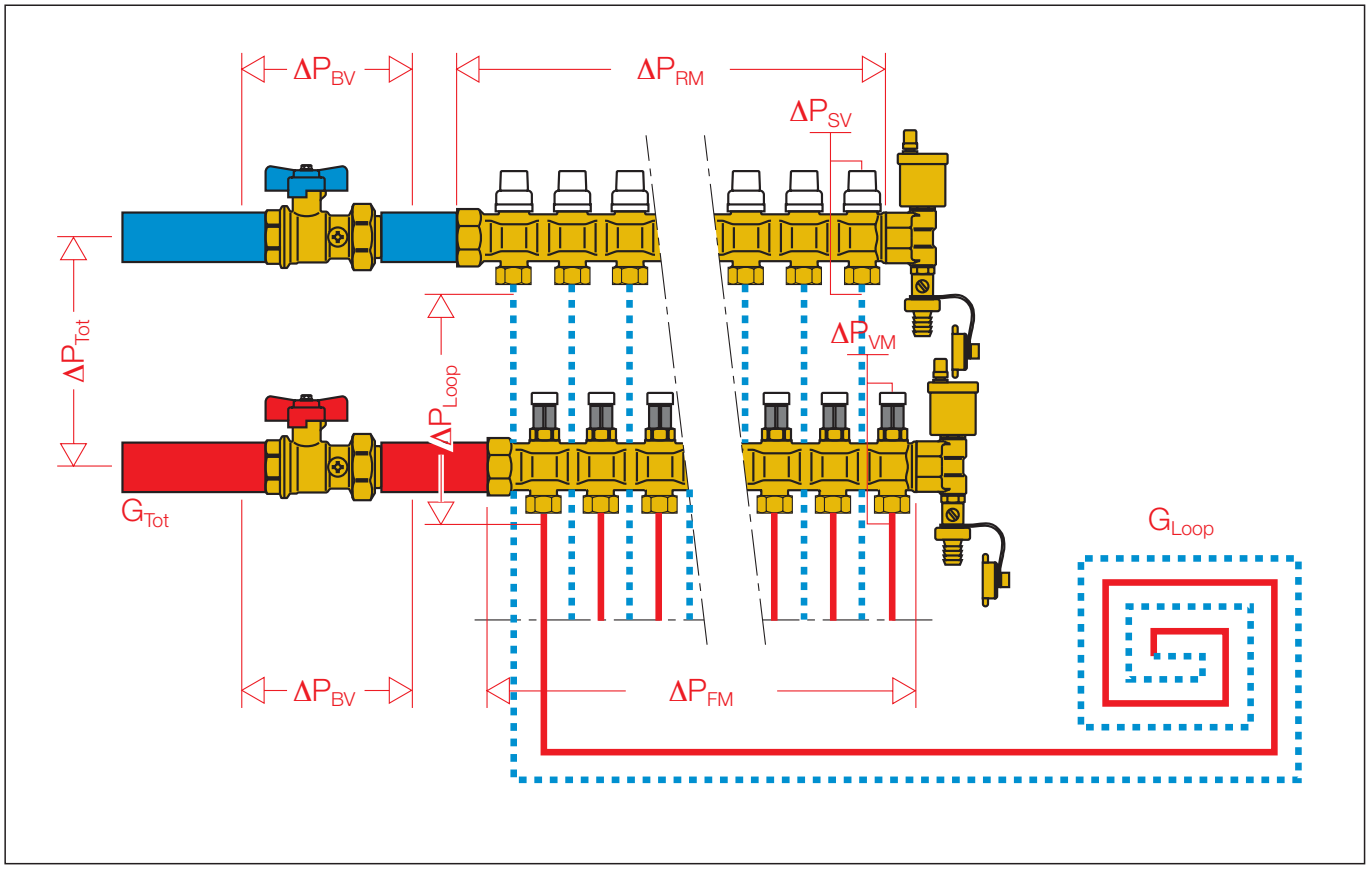

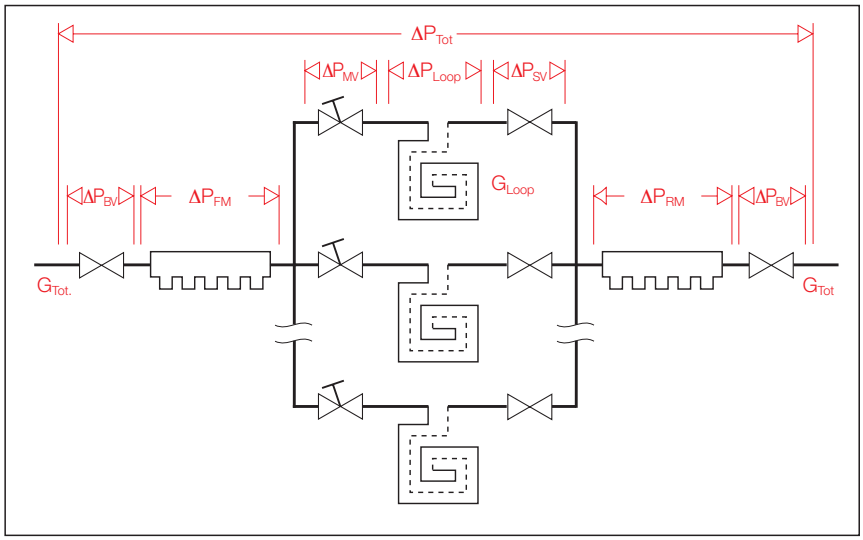

ΔP_{Tot} = Total loss at the manifold heads (Flow + Return + Loop)

ΔP_{MV} = Localised loss at the micrometric regulating valve loop (loop flow)

ΔP_{Loop} = Loop loss (loop flow)

ΔP_{SV} = Localised loss at the shut-off valve in the panel circuit (loop flow)

ΔP_{FM} = Distributed loss of the flow manifold (total flow)

ΔP_{RM} = Distributed loss of the return manifold (total flow)

ΔP_{BV} = Ball valve loss (total flow)

$$\Delta P_{Tot} = \Delta P_{MV} + \Delta P_{Loop} + \Delta P_{SV} + \Delta P_{FM} + \Delta P_{RM} + \Delta P_{BV} \times 2 \qquad (1.1)$$

After noting the hydraulic characteristics of the individual components and the design flows, the total loss can be calculated as the sum of the partial pressure losses of each specific component in the system, as shown in the formula *(1.1)*.

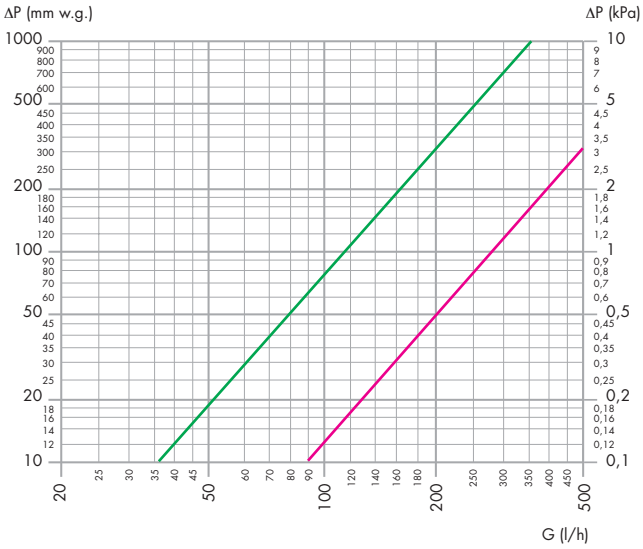

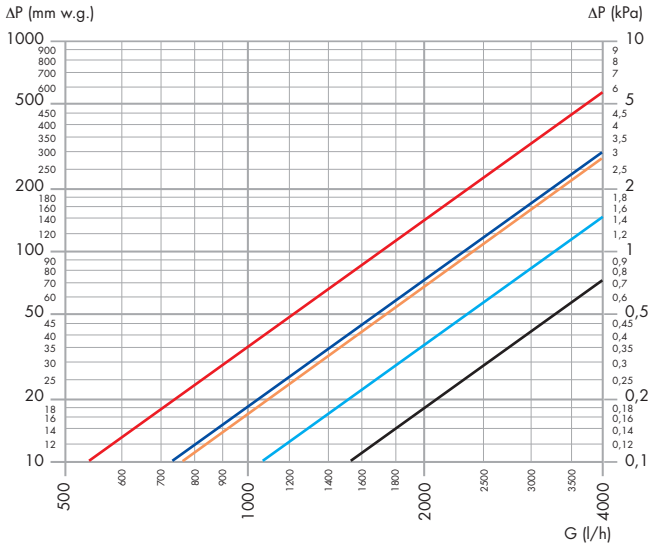

	Kv	$Kv_{0,01}$
Micrometric balancing valve fully open	1,15	115
Shut-off valve	2,87	287

- Kv = flow in m^3/h for a pressure loss of 1 bar

- $Kv_{0,01}$ = flow in l/h for a pressure loss of 1 kPa

	Kv	$Kv_{0,01}$
Flow manifold 3–7 outlets	24*	2400*
Flow manifold 8–13 outlets	17*	1700*
Return manifold 3–7 outlets	33,5*	3350*
Return manifold 8–13 outlets	23,5*	2350*
Ball valve	47,5	4750

** Average value*

Example of how to calculate the total pressure loss

Suppose we need to calculate the pressure loss of a manifold with three circuits with the following characteristics:

Total manifold flow: 400 l/h

The flow and pressure loss characteristics of the three piping loops are as follows:

Circuit 1	Circuit 2	Circuit 3	
ΔP1= 10 kPa	ΔP2= 15 kPa	ΔP3= 7 kPa	*(1.2)*
G1= 120 l/h	G2= 200 l/h	G3= 80 l/h	

Each segment of the formula *(1.1)*, is calculated using the following relationship:

$\Delta P = G^2/Kv_{0,01}^2$

· G= flow in l/h
· ΔP = pressure loss in kPa (1 kPa =100 mm w.g.)
· $Kv_{0,01}$ = flow in l/h through the device in question, with a pressure loss of 1 kPa

Note that the ΔP_{Tot} must be calculated taking into account the circuit with the greatest pressure losses distributed along the entire piping loop of the panel.
The circuit in question in our example is circuit 2.

Thus:

$\Delta P_{MV} = 200^2/115^2 = 3$ kPa
$\Delta P_{Loop} = 15$ kPa
$\Delta P_{SV} = 200^2/287^2 = 0{,}5$ kPa
$\Delta P_{FM} = 400^2/2400^2 = 0{,}03$ kPa
$\Delta P_{RM} = 400^2/3350^2 = 0{,}01$ kPa
$\Delta P_{BV} = 400^2/4750^2 = 0{,}007$ kPa

} Values obtained disregarding variations due to flow rate delivered to each branch circuit

Using the formula *(1.1)* we can add all the calculated terms to obtain:

$\Delta P_{Tot} = 3 + 15 + 0{,}5 + \cancel{0{,}03} + \cancel{0{,}01} + \cancel{0{,}0071} \approx 18{,}5$ kPa

Note:
We can ignore the three terms for the pressure losses associated with the ball valves and manifolds because their values are so low. Generally speaking, the total pressure loss is fairly close to the pressure loss of the branched circuit of the panel.

Use of the micrometric balancing valve

The micrometric balancing valves balance each individual circuit in the panels so that the actual design flow is obtained in each one.
Each individual circuit consists of a micrometric balancing valve, panel piping and shut-off valve. The following information must be taken into account in order to calibrate the system correctly:

· The flow of fluid that must pass through each circuit (design data).

· The pressure loss that occurs in each circuit in accordance with the flow:

$$\Delta P_{Circuit} = \Delta P_{Loop} + \Delta P_{SV} \qquad (1.3)$$

· The available head on the panel circuit or predetermined head:

$$H_{Predetermined} \geq \Delta P_{Circuit\ +\ disadvantaged} = \Delta P_{MV} + \Delta P_{Loop} + \Delta P_{SV} \qquad (1.4)$$

In accordance with the passage of the flow G_{Loop} the micrometric valve must ensure an additional pressure loss in all the circuits equal to the difference, indicated as **ΔP_{MV} (Δp micrometric valve)**.

To allow for an eventual increase in flow, the micrometric valve of the circuit with the greatest pressure loss may sometimes be considered as 80% open.

Once the two pieces of information, ΔP_{MV} and G_{Loop}, are known for each circuit, the optimal adjustment curve corresponding to the adjustment position of the valve must be chosen from the graph.

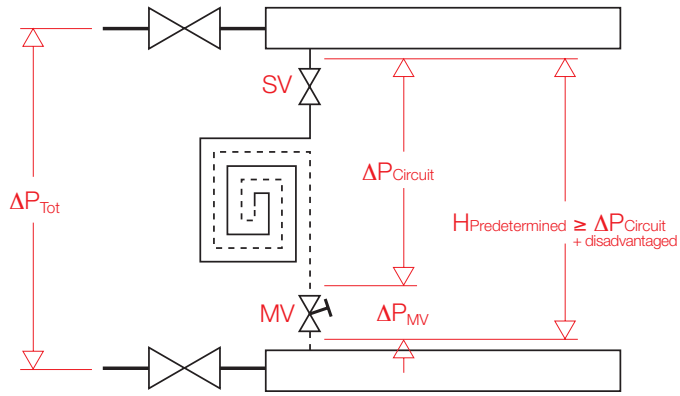

Example of preregulating the valve

Suppose that we need to balance three circuits that have the same pressure loss and loop flow characteristics shown in example *(1.2)*:

Since circuit 2 is the most disadvantaged because it experienced the greatest pressure loss in the panel piping, the remaining circuits must be adjusted as follows:

Circuit 2
ΔP_{Loop} = 15 kPa
G2 = 200 l/h

$\Delta P_{MV} = 200^2/115^2 = 3$ kPa
$\Delta P_{SV} = 200^2/287^2 = 0{,}5$ kPa

With the relationship *(1.4)*:
$\Delta P_{Circuit\ +\ disadvantaged} = 3 + 15 + 0{,}5 = 18{,}5$ kPa

Circuit 1
ΔP_{Loop} = 10 kPa
G1 = 120 l/h

$\Delta P_{SV} = 120^2/287^2 = 0{,}2$ kPa

with the relationship *(1.3)*:
$\Delta P_{Circuit} = 10 + 0{,}2 = 10{,}2$ kPa

Circuit 3
ΔP_{Loop} = 7 kPa
G3 = 80 l/h

$\Delta P_{SV} = 80^2/287^2 = 0{,}1$ kPa

with the relationship *(1.3)*:
$\Delta P_{Circuit} = 7 + 0{,}1 = 7{,}1$ kPa

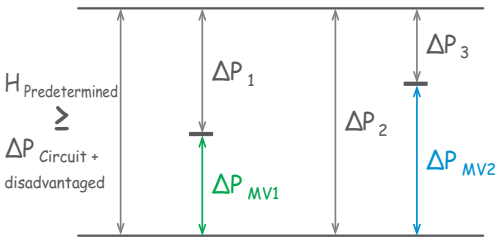

$$H_{Predetermined} \geq \Delta P_{Circuit\ +\ disadvantaged} = 18{,}5 \text{ kPa}$$

To adjust circuits 1 and 3, we need the following information to determine the adjustment position of the micrometric valves:

Circuit 1
ΔP_{MV1} = 8,3 kPa
G1 = 120 l/h
Adjustment position ~ 5.5

Circuit 2
Adjustment position completely open

Circuit 3
ΔP_{MV3} = 11,4 kPa
G3 = 80 l/h
Adjustment position ~ 3,5

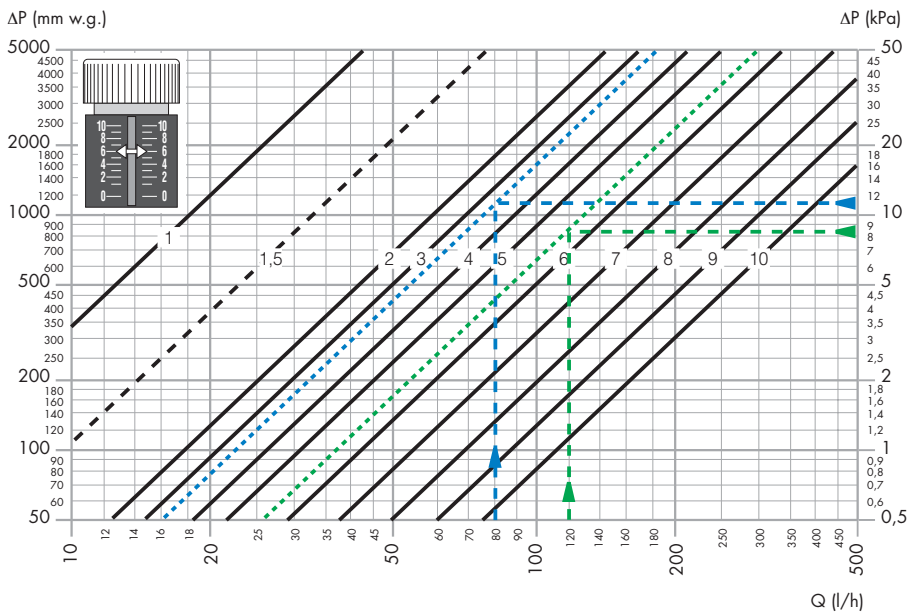

Hydraulic characteristics of the micrometric valve

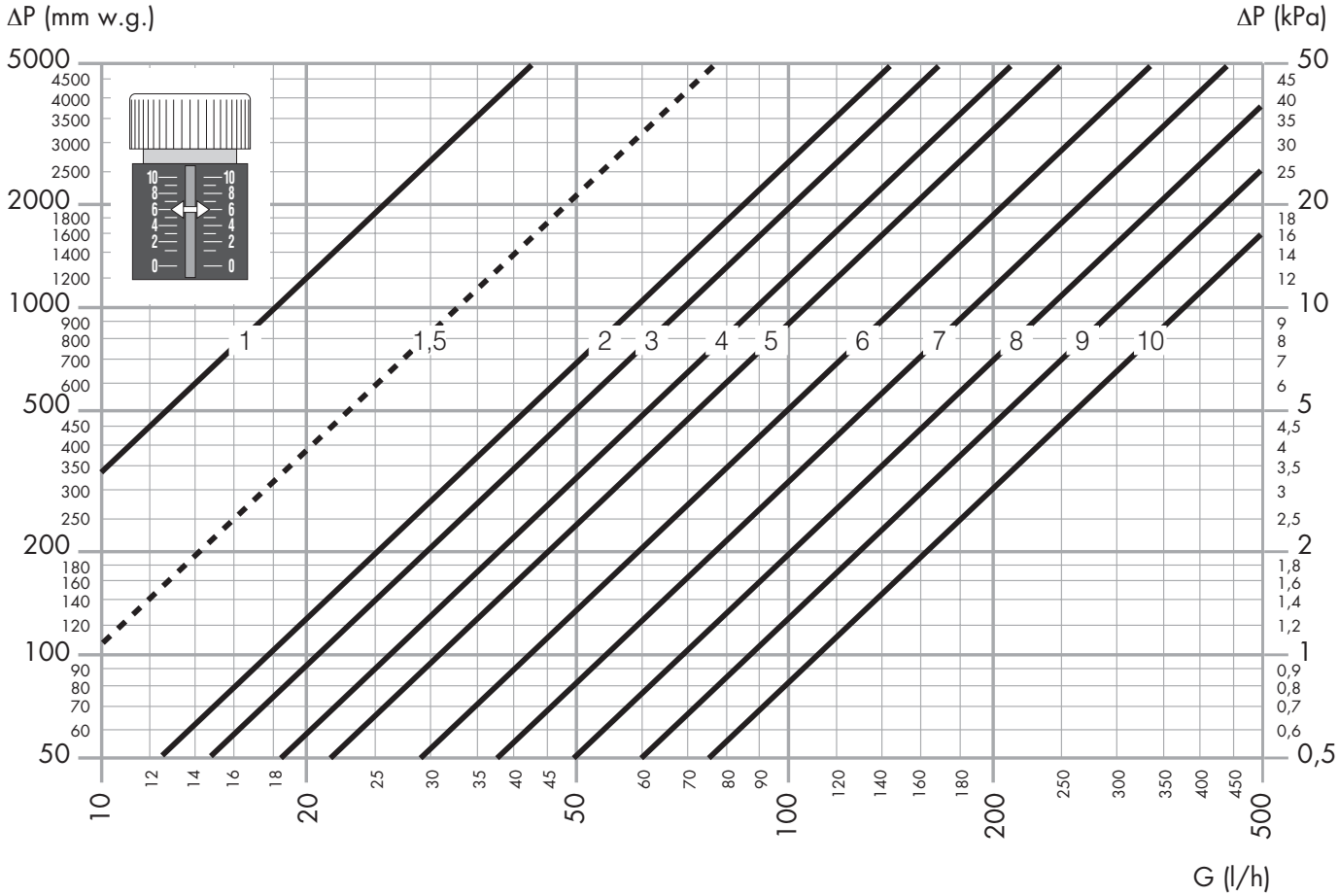

Adjustment position	1	1,5	2	3	4	5	6	7	8	9	10
Kv	0,06	0,09	0,18	0,21	0,27	0,31	0,42	0,53	0,7	0,89	1,15
$Kv_{0,01}$	6	9	18	21	27	31	42	53	70	89	115

- Kv = flow in m^3/h for a pressure loss of 1 bar

- $Kv_{0,01}$ = flow in l/h for a pressure loss of 1 kPa

SPECIFICATION SUMMARIES

Pre-assembled distribution manifold for radiant panel systems with 3 (from 3 to 13) outlets. Brass body. EPDM seals. 1” (1” and 1 1/4”) threaded F connections. 3/4"M outlet connections. Medium: water, glycol solutions. Maximum percentage of glycol: 30%. Maximum working pressure 10 bar. Temperature range 0–80°C. End fitting maximum discharge pressure 2,5 bar.
Consists of:
- Flow manifold complete with micrometric preregulating valves with graduated scale from 1 to10. Accuracy ± 5%.
- Return manifold complete with shut-off valves for use with thermo-electric actuator.
- Pair of end fittings consisting of a fitting with automatic air vent and drain cock.
- Pair of shut-off ball valves.
- Pair of mounting brackets.

MANIFOLDS AND ACCESSORIES

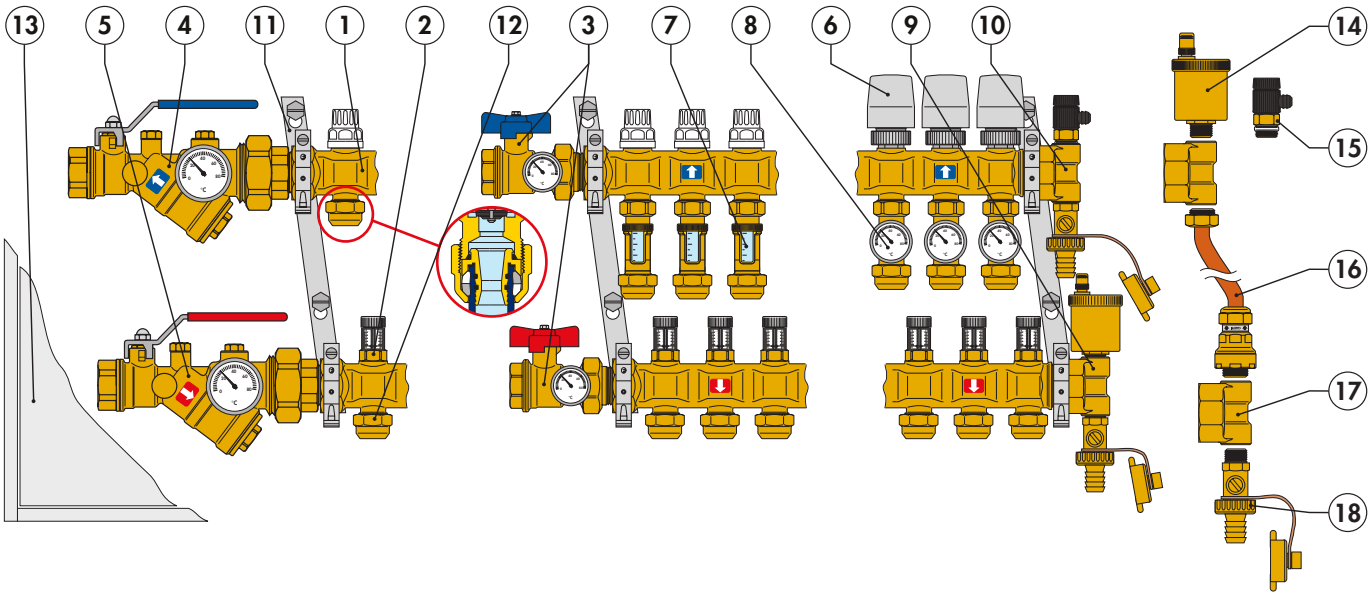

1. Manifold complete with shut-off valves
2. Manifold complete with micrometric balancing valves
3. Shut-off ball valve
4. Autoflow, series 120
5. Strainer, series 120
6. Thermo-electric actuator
7. Flow meter
8. Temperature gauge fitting
9. End fitting complete with automatic air vent valve
10. End fitting complete with manual air vent valve
11. Pair of mounting brackets
12. DARCAL fitting
13. Inspection wall box
14. Automatic air vent valve
15. Mini drain cock
16. Eccentric bypass kit
17. Double radial end fitting
18. Drain cock

Flow meter

Function

The flow meter is a device that is mounted on the return manifold of panel systems. It instantaneously controls the actual flow values in each individual circuit during the regulating phase, making the balancing operations of the system easier and more accurate.
Patented

Product range

Part # 22081 Flow meter ..... Size 3/4”

Technical specification

Materials: - body:	brass EN 12165 CW617N
- measuring spring:	stainless steel
- seals:	EPDM
- transparent cylinder and internal protection:	PSU
- float-indicator:	POM/PTFE
Medium:	water, glycol solutions
Max. percentage of glycol:	30%
Max. working pressure:	6 bar
Temperature range:	5–80 °C
Flow measurement scale:	1–4 l/min
Accuracy:	± 10%
Dual readout scale	
Connections:	3/4” M – Ø 18 x 3/4” F nut

Dimensions

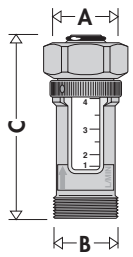

Code	A	B	C	Weight (lb)
22081	3/4"	3/4"	2.75"	1/3

Operating principle

A spring (1) connected to a float (2) is located inside the flow meter. The force applied by the water to the float as it flows through the flow meter is countered in proportion to the force applied by the spring. When the flow becomes stabilised at a particular value, the float reaches a specific position of equilibrium which also serves as an indicator. The system is balanced by moving the calibration valve on the flow manifold until it corresponds to the design flow, which can be read on the graduated scale printed on the transparent cylinder (3).
The flow (gpm) readout value corresponds to the lower edge of the float.

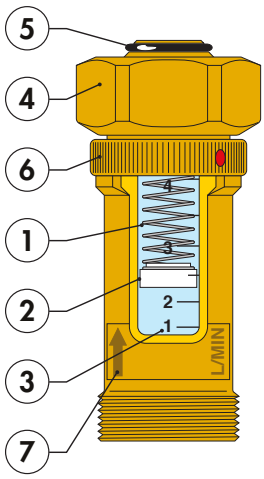

Installation

The flow meter must always be installed in a vertical position with the flow indication arrow pointing up (7) to ensure the greatest accuracy when measuring the flow.

Hydraulic characteristics

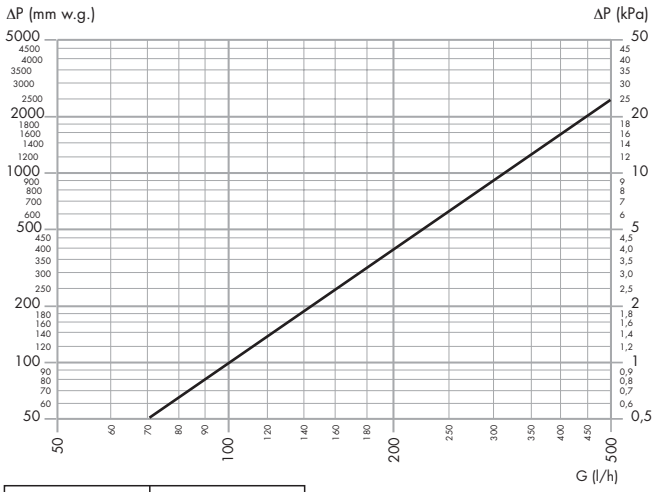

Kv = 1	$Kv_{0,01}$ = 100

- *Kv = flow in m^3/h for a pressure loss of 1 bar*
- *$Kv_{0,01}$ = flow in l/h for a pressure loss of 1 kPa*

Construction details

Easy installation

The flow meter is equipped with a captive nut (4) that is mounted onto the manifold and sealed with an O-ring (5) mounted on the tail piece. The captive nut solution simplifies assembly because it allows the flow meter to be mounted at the front of the manifold without having to change the optimal readout position.

Dual readout scale

The flow meter is equipped with a spare graduated scale that can be used if flow needs to be checked or the system rebalanced but the float can no longer be seen due to deposits on the transparent cylinder.
Turning the knurled nut (6) to the left will bring into view another scale in yellow that always stays clean due to the hermetic seal that prevents water from entering while the system is operating.
The nut must be returned into the original position on the white scale after reading the measurement.

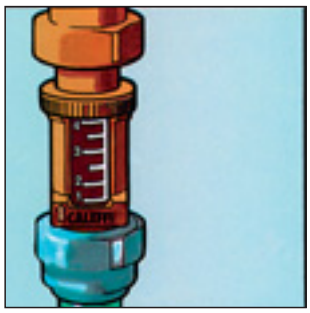

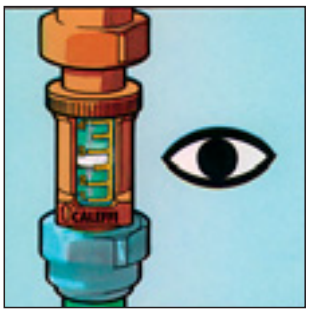


SPECIFICATION SUMMARIES

Flow meter with float. 3/4"M x 3/4"F nut threaded connections. Brass body, stainless steel measuring spring, EPDM seals, transparent cylinder and internal protection in PSU, float-indicator in POM/PTFE. Medium: water and glycol solutions. Maximum percentage of glycol 30%. Maximum working pressure: 6 bar. Temperature range 41–176 °F. Flow measurement scale: 1/4–1 gal/min. Accuracy ± 10%. Dual readout scale.

Fitting with self-adjusting diameter for simple and multi-layer plastic pipes series 680

Function

The self-adjusting fitting for simple and multi-layer plastic pipes is a mechanical device that allows the pipes, the radiant panel system circuits and the manifolds to be connected easily and securely. This versatile fitting has been specifically designed to adapt to the varying pipe diameters of these types of systems.
Patented

Product range

Self-adjusting fitting for simple and multi-layer plastic pipes ..... Size 3/4”

Technical specification

Materials:- nut:	brass EN 12164 CW614N
- adapter:	brass EN 12164 CW614N
- seals:	EPDM
- insulation ring:	EPDM
- olive:	PA 66 GF
Medium:	water, glycol solutions
Max. percentage of glycol:	30%
Max. working pressure	45 psi
Temperature range:	41-176°F (PEX)
	41–122°F (Multilayer)

Characteristic components

1) Adapter
2) Olive
3) Nut

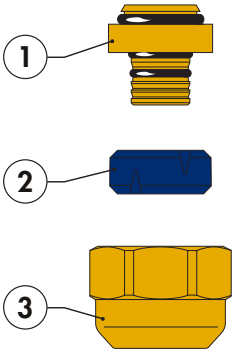

Code		Pipe (mm) Ø internal	Ø external
680502	3/4”	7,5–8	12–14
680503	3/4”	8,5–9	12–14
680500	3/4”	9–9,5	14–16
680501	3/4”	9,5–10	12–14
680506	3/4”	9,5–10	14–16
680515	3/4”	10,5–11	14–16
680517	3/4”	10,5–11	16–18
680524	3/4”	11,5–12	14–16
680526	3/4”	11,5–12	16–18
680535	3/4”	12,5–13	16–18
680537	3/4”	12,5–13	18–20
680544	3/4”	13,5–14	16–18
680546	3/4”	13,5–14	18–20
680555	3/4”	14,5–15	18–20
680564	3/4”	15,5–16	18–20
680505	3/4”	17	22,5

Construction details

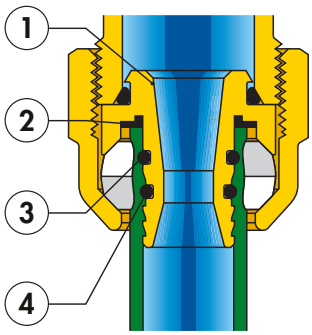

Versatility of pipe-fitting
This fitting has been specifically designed to adapt to several pipe diameters. The large variety of simple and multi-layer plastic pipes available on the market and the wide range of permissible tolerances have made it necessary to find an innovative solution for mechanical fittings. While maintaining the nominal dimensions of the fittings currently available on the market, this new solution has been constructed so that the same fitting can be used for pipes with differences on external diameters of up to .075" and differences on internal diameters of up to .02**".**

Resistance to pull out
This adapter offers a high degree of resistance to pull out of pipe. Its special clamping system makes it suitable for every application and ensures a leak tight fit.

Low pressure losses
The internal profile of the adapter (1) has been shaped to obtain a Venturi effect when the fluid passes through, reducing pressure losses by 20% compared to those created by passages with a similar diameter.

Insulation ring
The fitting is equipped with a rubber insulation element (2) to prevent contact between the aluminium in the multi-layer pipe and the brass fitting, thus preventing galvanic corrosion generated by the two different metals.

Dual O-ring seal
The adapter is equipped with two O-ring seals (3) and (4) in EPDM to prevent leaks even when operating at high pressure.

SPECIFICATION SUMMARIES

Self-adjusting fitting for simple and multi-layer plastic pipes with internal Venturi effect profile to limit pressure losses. 3/4”F connection. Brass nut and adapter, EPDM seals, EPDM insulation ring, PA 66 GF olive coupling. Medium: water and glycol solutions. Maximum percentage of glycol: 30%. Maximum working pressure: 10 bar. Temperature range: 5–80°C (PEX); 5–50°C (Multilayer).

Off-centre bypass assembly with fixed setting

Function

The distribution circuits of the heating fluid in radiant panel systems may be totally or partially shut off by closing the thermoelectric valves inside the manifolds.
When the flow decreases, the differential pressure inside the circuit may rise to levels that could cause problems with noise, high rates of fluid speed, mechanical erosion and hydraulic imbalance of the system itself. The differential bypass kit for manifolds maintains the pressure of the flow and return manifold circuits in balance if the flow changes.
The valve can be quickly connected to the manifolds, reducing overall size to a minimum.

Product range

Part #22090 Off-centre bypass assembly with fixed setting — Size 1/2” x 1/2”

Technical specification

Materials: - body:	brass EN 12164 CW614N
- nuts:	brass EN 12165 CW617N
- Ø 18 pipe with plate:	copper
- check valve obturator:	PA
- spring:	stainless steel
- seals:	EPDM
- gaskets:	asbestos-free fibre
Medium:	water, glycol solutions
Max. percentage of glycol:	30%
Max. working pressure:	10 bar
Temperature range:	-10–110°C
Fixed setting pressure:	25 kPa (2500 mm w.g.)
Connections:	1/2” M x 1/2” M

Dimensions

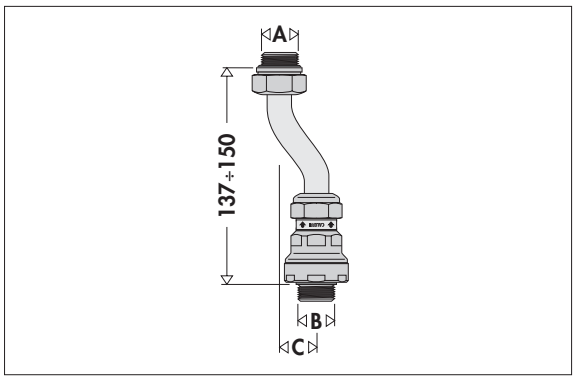

Code	A	B	C	Weight (lb)
22090	1/2"	1/2"	1.4"	.75

Operating principle

The by-bass valve contains a non-return obturator connected to a contrast spring. When the fixed setting pressure is reached, the valve obturator gradually opens, recirculating the flow in proportion to the closing of the thermo-electric valves and maintaining a constant differential pressure in the manifold circuit.

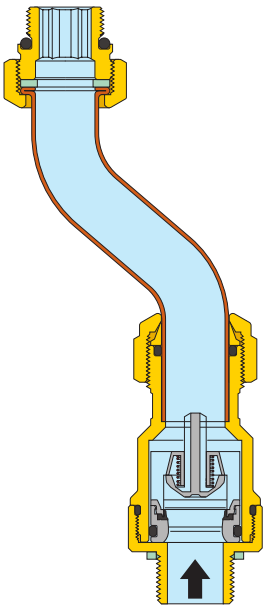

Construction details

The differential bypass assemby features a fixed setting that cannot be changed because it does not contain accessible adjustment parts. The small, compact size and offset connections makes this kit particularly easy to mount after installing thermo-electric valves on the manifold. It does not require a larger or deeper zone box than those used for normal manifolds.

Hydraulic characteristics

Bypass differential pressure: 25 kPa (2500 mm w.g.)

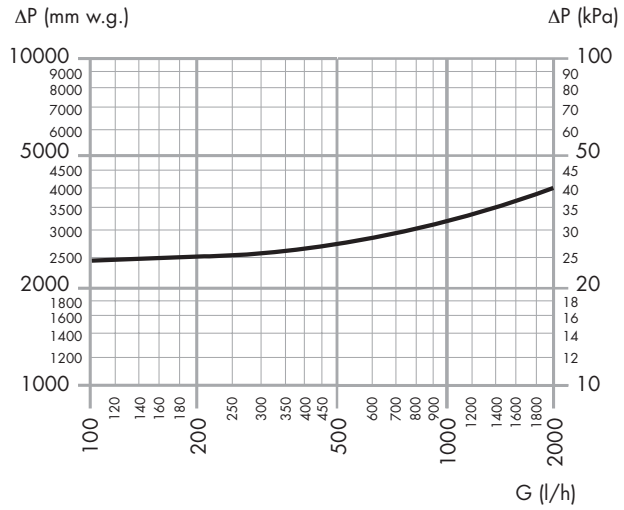

Installation of the differential bypass valve on manifolds

The differential bypass on manifolds is mounted by following the procedure below:

1) Remove the drain cock (A) from the terminal connector on the upper manifold.

2) Remove the end fitting (B) on the lower manifold.

3) Install the new terminal connector C on the lower manifold.

4) Install the differential bypass and reinstall the drain cock on the new terminal connector of the lower manifold.

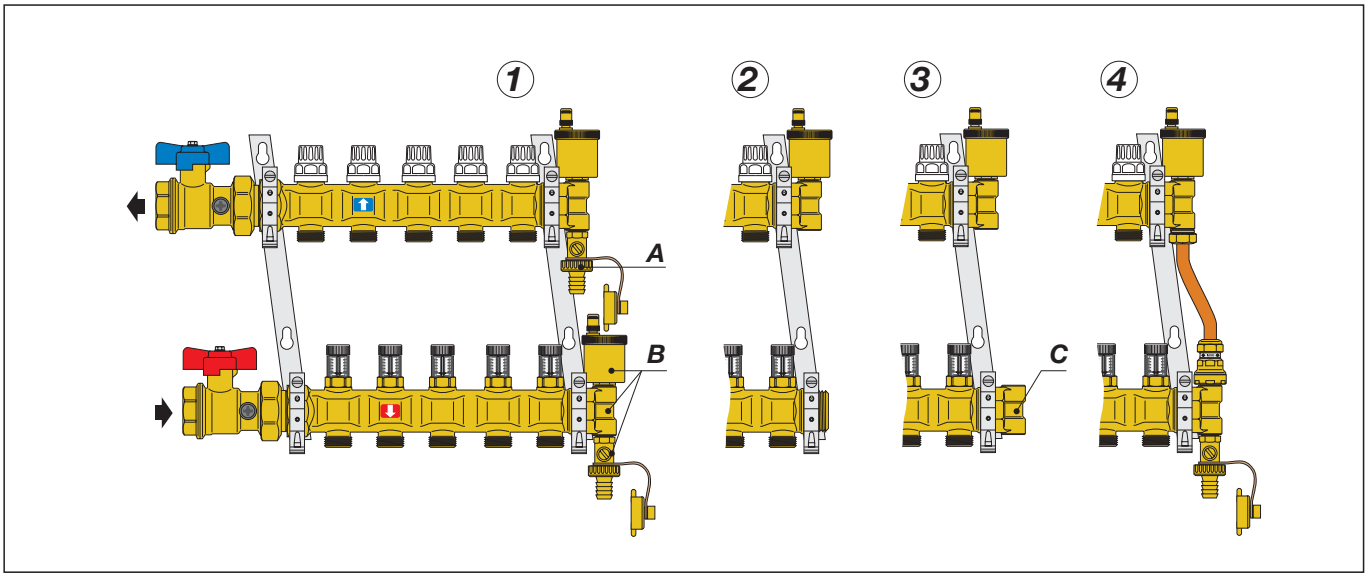

SPECIFICATION SUMMARIES

Off-centre bypass assembly with fixed setting. 1/2"M threaded connections. Brass body and nuts. Copper pipe. PA check valve obturator, stainless steel spring, EPDM seals, asbestos-free fibre gaskets. Medium: water and glycol solutions. Maximum percentage of glycol: 30%. Maximum working pressure: 145 psi. Temperature range: 14–230 °F. Fixed setting pressure: 3.6 psi.

Thermo-electric actuators

22000

depl. 01042

Thermo-electric actuator.
Normally closed.

Code	Voltage (V)
656102	230
656104	24

22001

depl. 01042

Thermo-electric actuator.
Normally closed.
With auxiliary microswitch

Code	Voltage (V)
656112	230
656114	24

Technical specification

- Materials: - protection shell: self-extinguishing polycarbonate
  - colour: RAL 9010 white; version with micro: RAL 9002 grey
- Normally closed
- Electric supply: 230 V (ac) - 24 V (ac) - 24 V (cc)
- Peak current: ≤ 1 A
- Working current: 230 V (ac) = 13 mA; 24 V (ac) - 24 V (cc) = 140 mA
- Power consumption: 3 W
- Auxiliary microswitch contacts rating (code 656112/114): 0,8 A (230 V)
- Protection class: IP 44 (in vertical position)
- Double insulation construction: CE
- Max. ambient temperature: 50°C
- Operating time: opening and closing from 120 s to 180 s
- Length of supply cable: 80 cm

Box

Inspection wall box for
manifold systems.
Wall and floor installations
(with 660 series).
With lock.
In painted sheet steel.
Adjustable depth from 110 to
140 mm.
For manifolds series 668.

Part #	(l x w x d, in.)
22100	17.75 x 15.75 x 4.33 –5.5
22101	17.75 x 23.6 6 x 4.33 –5.5
22102	17.75 x 31.50 x 4.33 –5.5
22103	17.75 x 39.37 x 4.33 –5.5
22104	17.75 x 47.25 x 4.33 –5.5

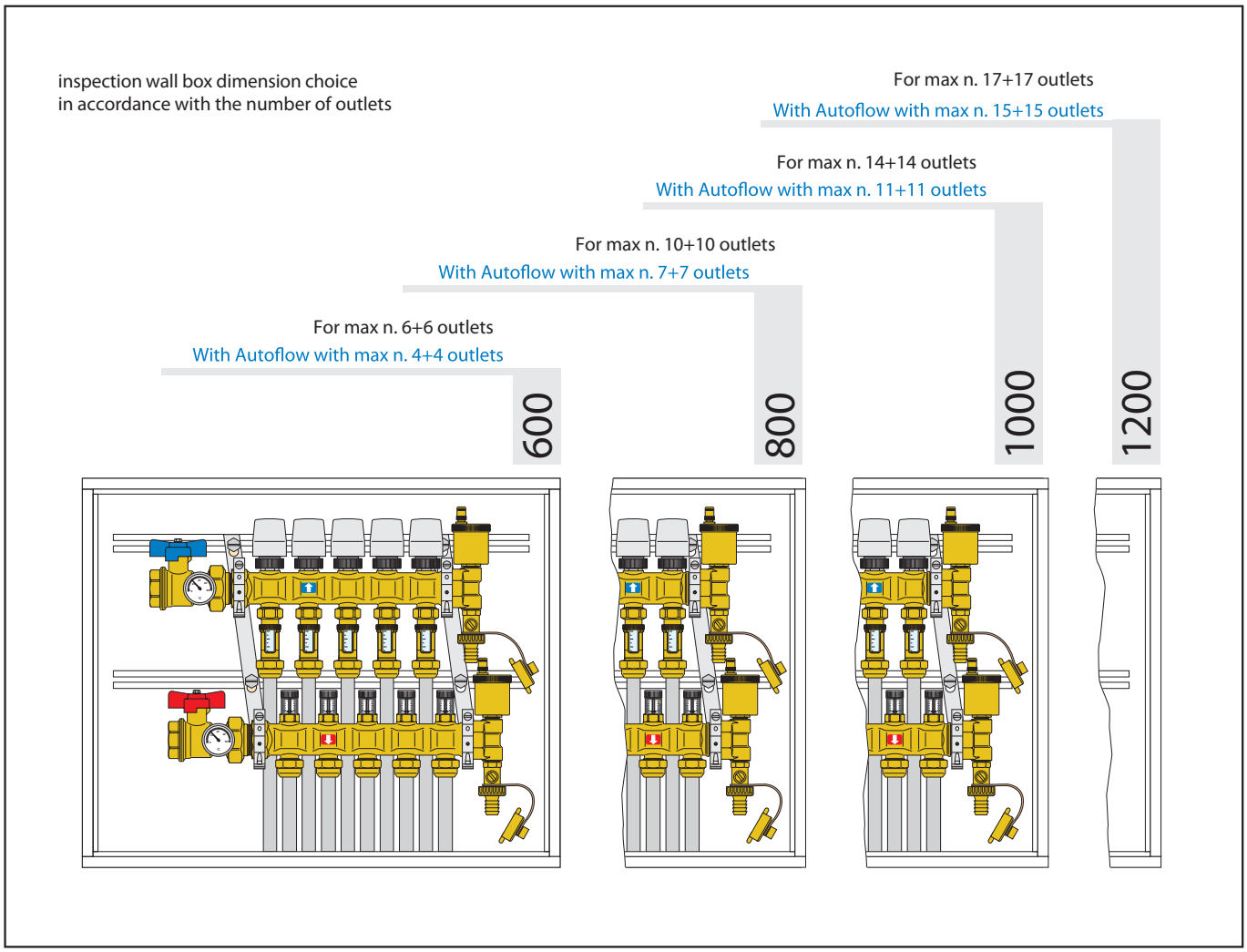

We reserve the right to change our products and their relevant technical data, contained in this publication, at any time and without prior notice.

Infloor Sales Service PO Box 4945· Buena Vista, CO 81211 · TEL. 800-608-0562 · FAX 719-395-3555
· http://www.infloor.com · E-mail: info@infloor.com ·